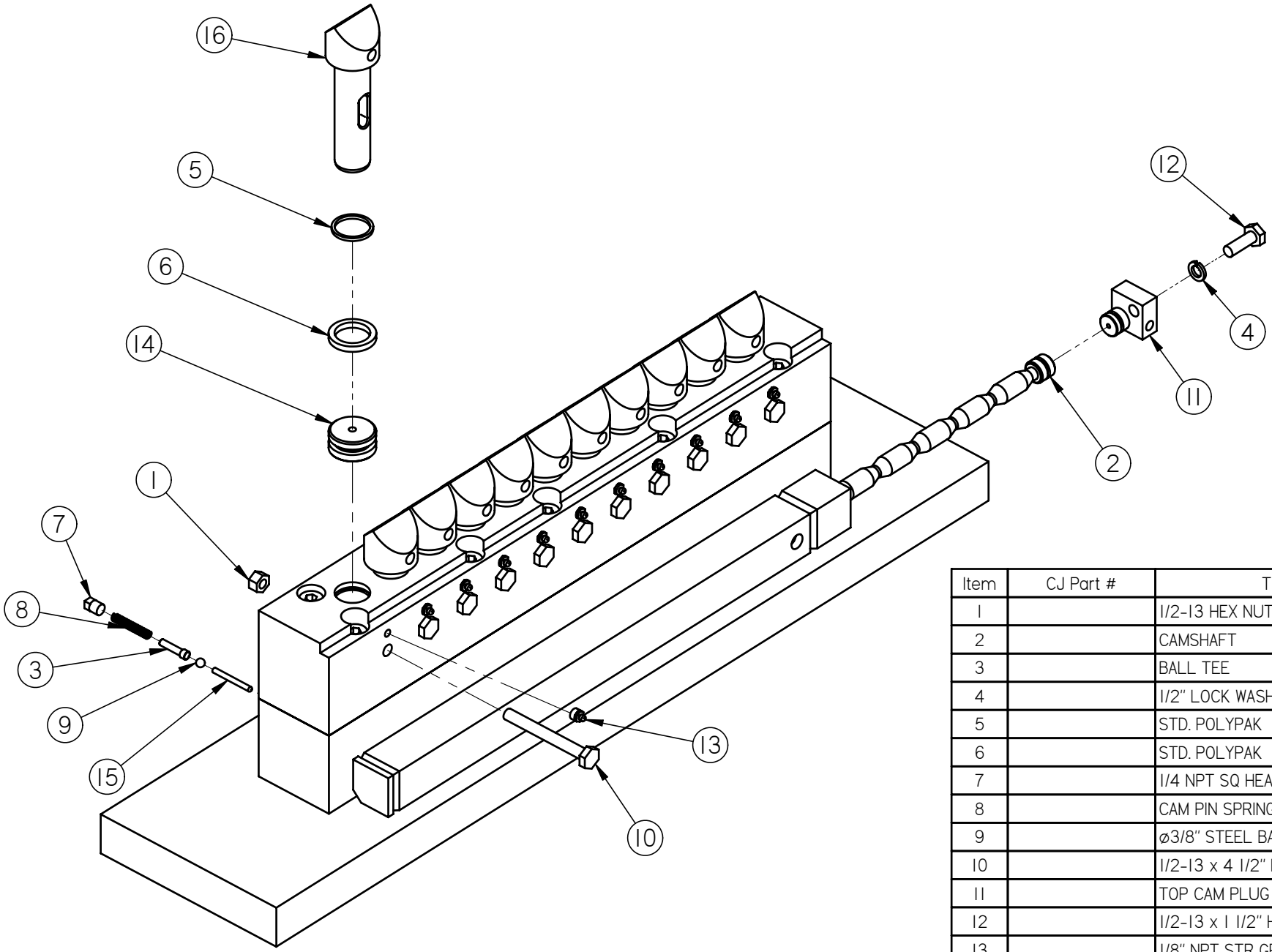

Item	CJ Part #	Title
1		1/2-13 HEX NUT
2		CAMSHAFT
3		BALL TEE
4		1/2" LOCK WASHER
5		STD. POLYPAK
6		STD. POLYPAK
7		1/4 NPT SQ HEAD PLUG
8		CAM PIN SPRING
9		ø3/8" STEEL BALL
10		1/2-13 x 4 1/2" HHCS
11		TOP CAM PLUG
12		1/2-13 x 1 1/2" HHCS
13		1/8" NPT STR GREASE ZERK
14		2" PISTON, POLYPAK
15		CAM LOCKING PIN
16		ø2" TOOTH, 1" STROKE